2.4/5 GHZ 3/4 DBI 6 ELEMENT INDOOR/ OUTDOOR OMNI ANTENNA WITH N-STYLE

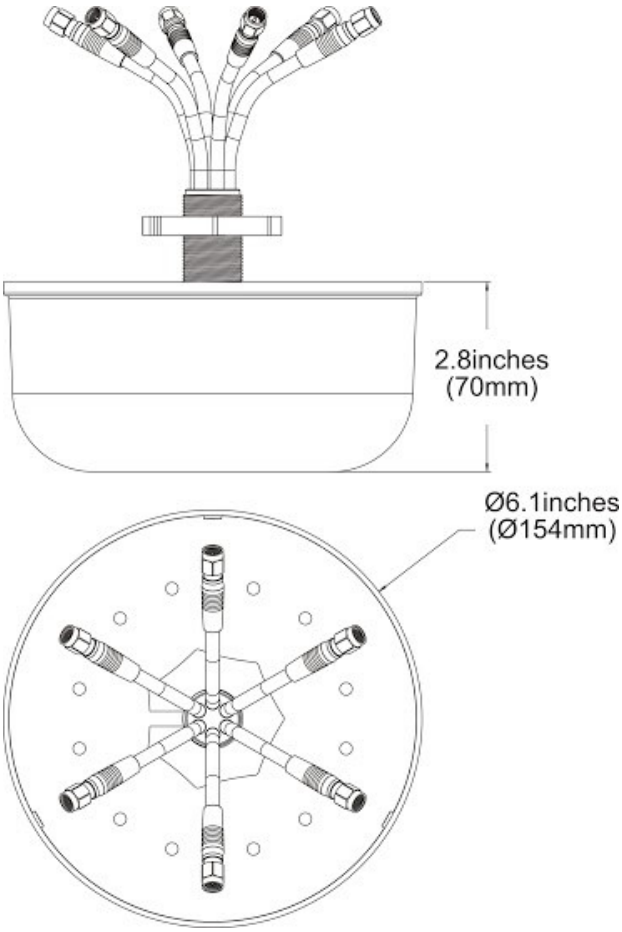

TITLE: 2.4/5 GHz 3/4 dBi 6 Element Indoor/Outdoor Omni Antenna with N-Style	
PART NUMBER: ATS-OO-245-34-6NP-36	AccelTex Solutions 1.888.406.8906 sales@acceltex.com
V1.0	

The facts and figures herein are carefully compiled to the best of our knowledge and are intended for general informational purposes only. Responsibility for the use and application of AccelTex Solutions materials rests with the end user. All AccelTex Solutions products are sold pursuant to the AccelTex Solutions Terms and Conditions of Sale. © 2017 AccelTex Solutions. All Rights Reserved. AccelTex, AccelTex Solutions, the AccelTex Solutions Logo and other marks are trademarks or registered trademarks of AccelTex Solutions. Other products or service names may be the property of third parties.